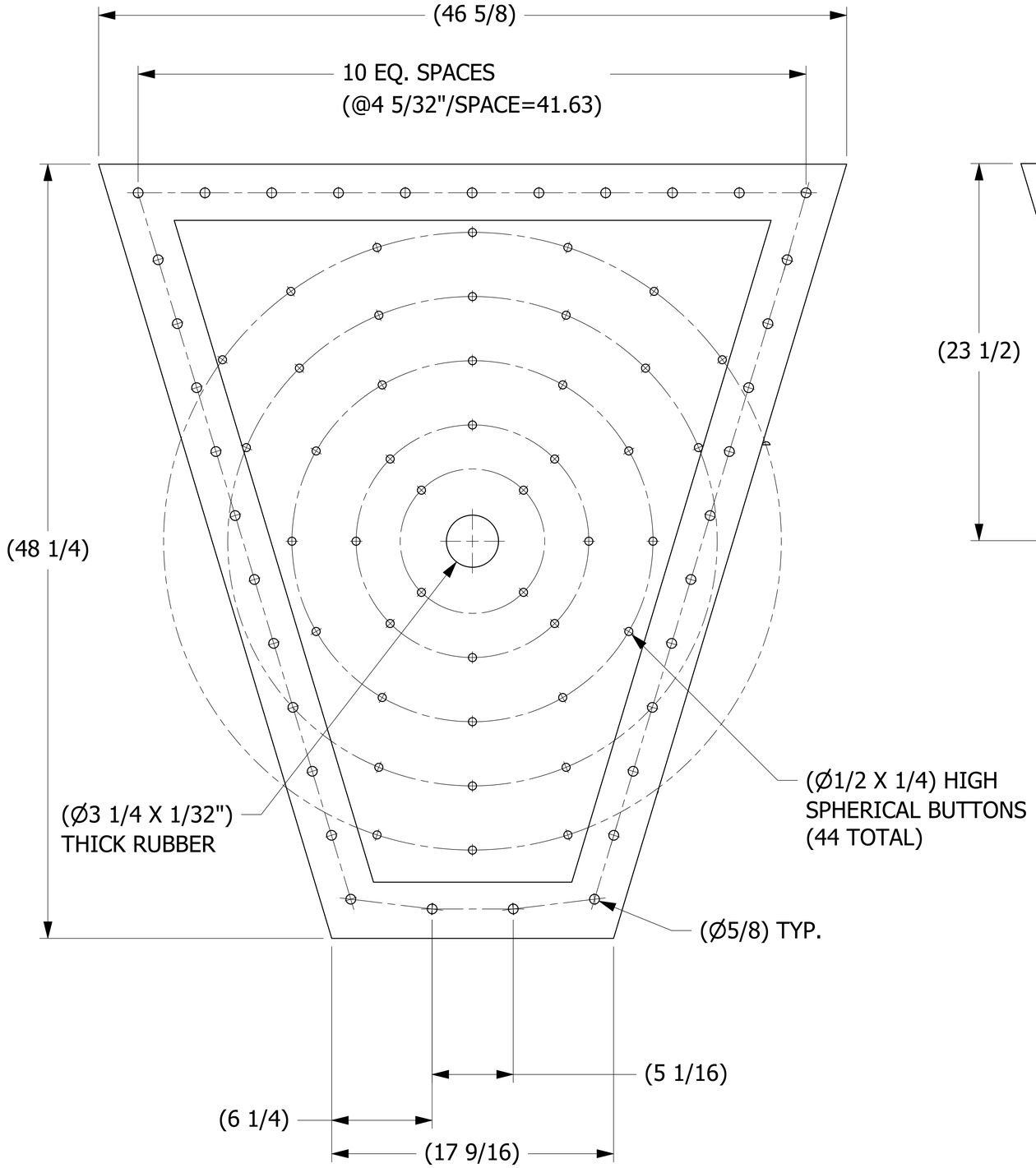

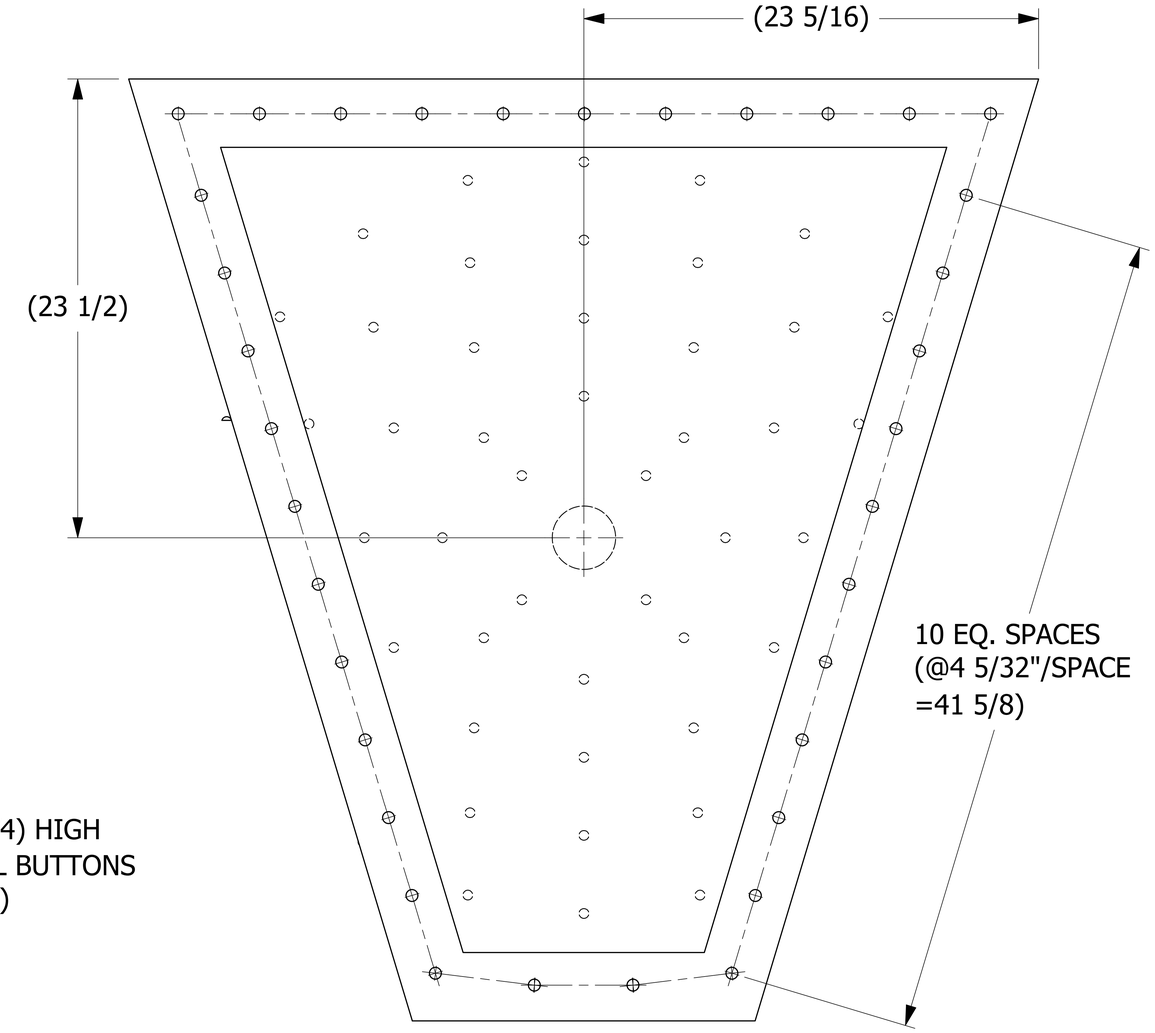

SALES DRAWING SALES DRAWING SALES DRAWING

NOTES:
1. MATERIAL SPEC. FOR FABRIC: FDA 3 PLY SOLID WOVEN COTTON 5/32" THICK.
2. MATERIAL SPEC FOR GASKET: WHITE FDA SBR RUBBER DURO 60±5.
3. GASKET THICKNESS IS .224 ON EACH SIDE. OVERALL THICKNESS OF OF PART INCLUDING FABRIC AND GASKET IS .47 ± .03.

REV	BY	DATE	REF #	PUB
D	WEB	2/13/25	202502131505	WEB

UNLESS OTHERWISE SPECIFIED DIMENSIONAL TOLERANCES
FRACTIONAL: ±1/16
X.XX: ±.03
X.XXX: ±.015
ANGULAR: ±1°
DEBURR ALL SHARP EDGES. ALL MACHINED SURFACES TO HAVE A 125 RMS FINISH UNLESS NOTED OTHERWISE.
THIRD ANGLE PROJECTION

DRAWN BY:	CHL
CHECKED BY:	SAB
PROTOTYPE DATE:	6/21/2001
APPROVED FOR PRODUCTION BY:	ACC
PRODUCTION DATE:	2/20/2002
SIZE:	E
DRAWING #:	15870

SALCO PRODUCTS, INC.

PART NAME: AERATOR PAD TRAPEZOID

MATERIAL: SEE NOTES 1 & 2

PROJECT #: 980426A | SHEET #: 1 OF 1 | SCALE: 1:3

PART #: PD3AP3C23

THIS PRINT, PROPERTY OF SALCO PRODUCTS INC, CONTAINS PROPRIETARY INFORMATION AND MUST NOT BE COPIED, REPRODUCED, OR USED DETRIMENTALLY TO OUR INTEREST.